HYUNDAI
POWER PRODUCTS

PETROL WATER PUMP
HY50, HY80, HY100, HYC50, HYT80

Instruction Manual

GENUINE PRODUCT OF
HYUNDAI CORPORATION

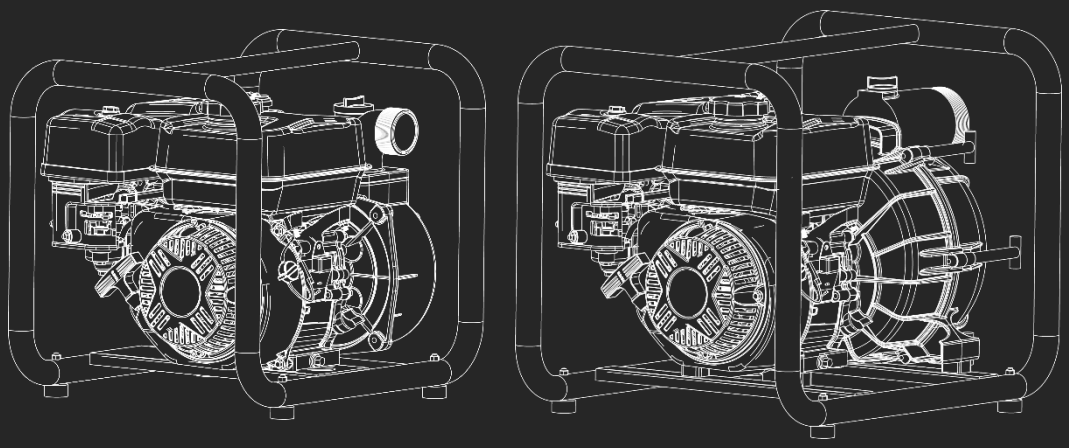

WARNING: Read the instructions carefully before use.

INDEX

	CONTENTS	PAGE NO.S
1	SAFETY	3 - 7
2	MACHINE SPECIFIC SAFETY	7 - 8
3	PART LOCATIONS	9 - 10
4	PRE OPERATION INSPECTION	10 - 12
5	ASSEMBLY & OPERATION	13 - 15
6	STARTING PROCEDURE	16
7	STOPPING PROCEDURE	17
8	MAINTENANCE	17 - 20
9	STORAGE	21
10	TROUBLE SHOOTING	22
11	SPECIFICATION	24
12	DECLARATION OF CONFORMITY	25
13	RECYCLING & PRODUCT DISPOSAL	26
14	CONTACT DETAILS	27
15	WARRANTY & MANUAL UPDATES	27

DESMI Ro-Clean A/S
Hestehaven 61
DK-5260 Odense S
Denmark

Tlf.: +45 65 48 16 10
Fax: +45 65 48 16 15
Internet: www.desmi.com

CVR-nr.: 69042910
VAT-nr.: 69042910

1. SAFETY

1.1 General Safety Notes.

1.2 The operator of the machine is responsible for, and has a duty of care in making sure that the machine is operated safely and in accordance with the instructions in this user manual. Keep the manual safe and pass it on if the machine is loaned or sold to another user.

1.3 Please note the following safety points.

1.4 The machine should never be left it in a condition which would allow an untrained or unauthorised person/s to operate this machine.

1.5 All due care and diligence should be taken by the operator for the safety of and with regard to those around whilst using the machine.

1.6 Some or all of the following - warning signs, symbols and/or PPE pictograms may appear throughout this manual. You **MUST** adhere to their warnings. Failure to do so may result in personal injury to yourself or those around you.

DANGER

Indicates a hazard, which, if not avoided, could result in serious injury or death.

WARNING

Indicates a hazard, which, if not avoided, could result in serious injury.

CAUTION

Indicates a hazard which, if not avoided, might result in minor or moderate injury.

NOTE

Indicates a situation that could easily result in equipment damage.

READ and keep the manual safe and pass it on if the machine is loaned or sold to another user.

You MUST fully understand all instructions to ensure you use and operate the machine safely.

Appropriate Personal Protective Equipment (PPE), **MUST** be worn at all times when operating or repairing the machine.

DESMI Ro-Clean A/S
Hestehaven 61
DK-5260 Odense S
Denmark

Tlf.: +45 65 48 16 10
Fax: +45 65 48 16 15
Internet: www.desmi.com

CVR-nr.: 69042910
VAT-nr.: 69042910

1.10 Carbon Monoxide (where applicable).

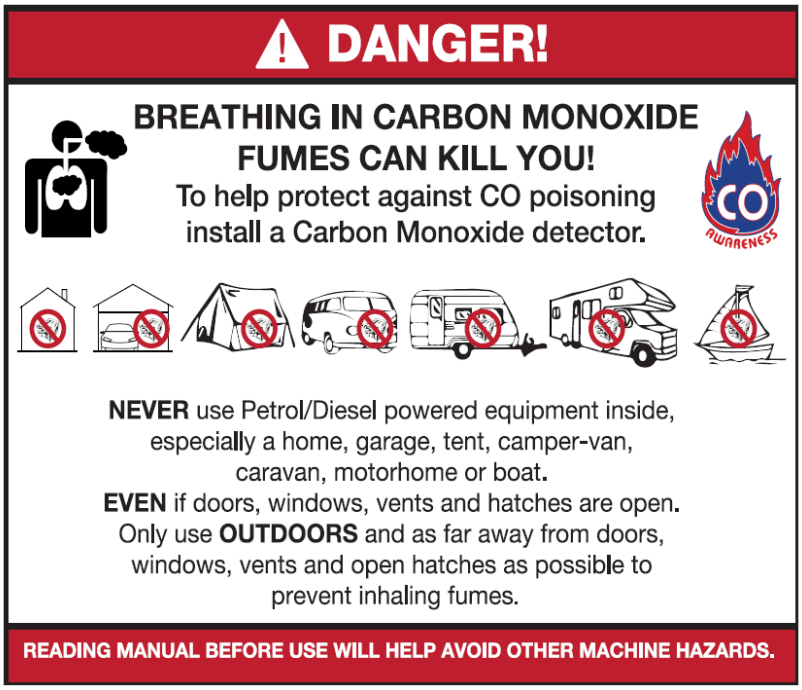

1.11 Carbon monoxide is a colourless and odourless gas. Inhaling this gas can cause death as well as serious long term health problems such as brain damage.

1.12 The symptoms of carbon monoxide poisoning can include but are not limited to the following;
Headaches, dizziness, nausea, breathlessness, collapsing or loss of consciousness.

1.13 Carbon monoxide poisoning symptoms are similar to flue, food poisoning, viral infections and simply tiredness. It is quite common for people to mistake this very dangerous poisoning for something else.

1.14 To avoid carbon monoxide poisoning **DO NOT** use Petrol/Diesel powered equipment inside any of the following; Home, garage, tent, camper van, mobile home, caravan or boat. This is not exhaustive and if you are in any doubt contact your dealer.

1.15 If you think you have or someone around you has been affected by carbon monoxide poisoning;

1.16 Get them fresh air immediately, by leaving the affected area or by opening doors and windows. If safe and practical to do so make sure that the machine is turned off.
DO NOT enter a room you suspect of having carbon monoxide present – instead call the emergency services.

1.17 Contact a Doctor immediately or go to Hospital – let them know that you suspect carbon monoxide poisoning.

1.18 **DO NOT** use in an enclosed area or moving vehicle.

DESMI Ro-Clean A/S
Hestehaven 61
DK-5260 Odense S
Denmark

Tlf.: +45 65 48 16 10
Fax: +45 65 48 16 15
Internet: www.desmi.com

CVR-nr.: 69042910
VAT-nr.: 69042910

1.20 General Fuel Safety (where applicable).

CAUTION

ALL FUELS ARE FLAMABLE

1.21 Fire Hazard – keep fuel away from all sources of ignition for example heaters. Lamps, sparks from grinding or welding.

1.22 **DO NOT** carry out hot work on tanks that have contained fuel.

1.23 **ALWAYS** keep the work area tidy.

1.24 **ALWAYS** clean up spills promptly using absorbent granules and a lidded bin.

1.25 **ALWAYS** dispose of waste fuels correctly.

1.30 Fueling/De-fueling (where applicable).

CAUTION

ALL FUELS ARE FLAMABLE

1.31 **ALWAYS** fuel and defuel in a well ventilated area outside of buildings.

1.32 **ALWAYS** wear correct, suitable and fit for purpose Personal Protective Equipment (PPE), suggested items are but not limited to safety gloves, overalls.

1.33 When fueling/de-fueling **ALWAYS** avoid inhaling fumes.

1.34 When de-fueling **ALWAYS** use a proper fuel retriever.

1.35 **ALWAYS** carry fuel in the correct and clearly marked container.

1.40 Electrical Safety (where applicable).

1.41 Electricity can kill – **NEVER** work on **LIVE/ENERGISED** equipment.

1.42 Prior to carrying out any maintenance work you **MUST** identify electrical isolation methods and isolate all electrical supplies.

1.43 Prior to use and with all electrical supplies isolated, you **MUST** check all electrical cables, plugs and connectors for the following;

1.44 Are intact and have no signs of damage, to include but not limited to bare wires, chaffing, cuts and loose wiring.

1.45 If there are any signs of damage, the damaged item **MUST** be taken out of service until the damage has been repaired by an electrically competent person.

DESMI Ro-Clean A/S
Hestehaven 61
DK-5260 Odense S
Denmark

Tlf.: +45 65 48 16 10
Fax: +45 65 48 16 15
Internet: www.desmi.com

CVR-nr.: 69042910
VAT-nr.: 69042910

1.46 All trailing cables should be routed so as not to cause any kind of trip hazard.

1.47

NEVER work on or near electricity with wet hands, wet clothing and wet gloves.

1.50 Batteries (where present).

1.51 Batteries present a risk if they become damaged by the possible leaking of electrolyte. This electrolyte is an acid and can cause serious burn injuries. Care should be taken when working on or near them. **NOTE** the electrolyte may be in a liquid or gel form.

1.52 Should you come in to contact with electrolyte you should;

1.53 Remove all clothing contaminated with electrolyte. If you cannot remove then saturate them in water.

1.54 Get medical assistance as soon as possible. You must advise the medical staff of the type of acid.

1.55 Lead/acid battery = dilute sulphuric acid.

1.56 Nickel/cadmium = potassium hydroxide alkali electrolyte.

1.57 Use fresh running water to wash off excess electrolyte, continue this until medical assistance arrives. Make sure that you do not was the electrolyte to another part of your body or face.

1.58 If electrolyte comes in to contact with Eyes the electrolyte needs to be immediately washed away with large amounts of water. Make sure that you do not wash the electrolyte to another part of your face or body.

1.59 Gasses from charging batteries are highly flammable and great care should be taken to charge in well ventilated areas.

1.59.1

There is an explosion risk if the battery terminals are short circuited, when connecting/disconnecting **ALWAYS** exercise great care so that the terminals or battery leads are **NOT** allowed to touch and cause a spark. **ALWAYS** use suitable insulated tools.

1.60 Vibrations (where applicable).

1.61 Prolonged use of hand held (operated) machines will cause the user to feel the effects of/from vibrations. These vibrations can lead to white finger (Raynaud's phenomenon) or carpal tunnel syndrome. This condition reduces the ability of the hand to feel and regulate temperature, causing numbness and heat sensations and may cause never damage and circulatory tissue death.

1.62 Not all factors that lead to white finger disease are known, but cold weather, smoking and other diseases that affect blood vessels and blood circulation as well as large and long-lasting impact of shocks are considered factors in the formation of white finger. Note the following to reduce the risk of white finger and carpal tunnel syndrome;

1.63 Wear gloves and keep your hands warm.

1.64 Take regular breaks.

1.65 All of the above precautions may help reduce the risk of white finger disease but not rule out the carpal tunnel syndrome. Long-term and regular users are therefore

DESMI Ro-Clean A/S
Hestehaven 61
DK-5260 Odense S
Denmark

Tlf.: +45 65 48 16 10
Fax: +45 65 48 16 15
Internet: www.desmi.com

CVR-nr.: 69042910
VAT-nr.: 69042910

recommended to observe the condition of your hands and fingers. Seek medical attention immediately if any of the above symptoms should occur.

1.70 Noise (where applicable).

1.71 The operating noise of the machine can damage your hearing. Wear hearing protection such as earplugs or ear defenders to protect your hearing. Long-term and regular users are advised to have hearing checked regularly. Be especially vigilant and cautious when hearing ear protection because your ability to hear alarm warnings will be reduced.

1.72 Noise emissions for this equipment is unavoidable. Carry out noisy work at approved times and for certain periods. Limit the working time to a minimum. For your personal protection and protection of people working nearby it is also advisable for them to wear hearing protection.

1.73

See Certificate of Conformity section for Outdoor Noise declaration of conformity.

2. MACHINE SPECIFIC SAFETY

2.1 **CLEAN WATER PUMPS**: Designed for pumping clean, fresh water only.

TRASH WATER PUMPS: Designed for pumping liquids with debris up to 25mm.

CHEMICAL WATER PUMPS: Designed for pumping liquids with weak acid and bases (pH 4-11). Commonly seawater and liquid fertilizer.

2.2 To prevent fire, **NEVER** add fuel to the tank while the engine is running or warm.

2.3 Wipe away any spilt fuel or oil with a clean cloth before operating.

2.4 Keep sources of ignition away from the machine at all times.

2.5 To prevent fire and to provide adequate ventilation, keep the machine at least one meter away from buildings and other equipment during operation.

2.6 Operate the machine on level ground – **DO NOT** place the machine indoors whilst the engine is still hot.

2.7 **NEVER** use the machine indoors or in a closed area with poor ventilation.
This machine produces Carbon Monoxide which, if inhaled, can kill.

2.8 The exhaust and engine will get hot during operation and remain hot for some time after operation. DO NOT touch these parts until the machine has had sufficient time to cool completely.

2.9 Careless or improper use of any water pump may cause serious or fatal injury.

2.10 If you are unsure how to use your machine you must read and understand all of this manual and get your dealer to demonstrate its use.

2.11 Observe all applicable local safety regulations and standards.

DESMI Ro-Clean A/S
Hestehaven 61
DK-5260 Odense S
Denmark

Tlf.: +45 65 48 16 10
Fax: +45 65 48 16 15
Internet: www.desmi.com

CVR-nr.: 69042910
VAT-nr.: 69042910

2.12 Children should never be allowed to use this machine.

2.13 Bystanders, especially children and animals should not be allowed in the area while the machine is in use.

2.14 The operator is responsible for avoiding injury to third parties and damage to their property.

2.15 Do not lend or rent your water pump without the owner's manual.
Be sure that anyone who uses your water pump fully understands the information contained in this manual.

2.16 You must be fit to operate this water pump.

2.17 You should not operate the water pump if you are unwell or physically unable.
If you get tired, stop the machine and take a break.

2.18 Do not operate the machine if you are under the influence of any substances, drugs, alcohol, or medication that may impair vision, dexterity or judgement.

2.19 Only the attachments supplied are expressly approved for use with your specific model.

2.20 Other attachments must not be used because of the increased risk of accidents or machine damage.

2.21 No liability will be accepted for personal injury or damage caused to the machine or property while using unauthorised attachments.

2.22 Before starting, check the choke lever and stop switch can move freely.

2.23 Check the tightness of the spark plug cap, if loose sparks may occur and ignite the escaping fuel vapours.

2.24 For safety reasons, this water pump must not be used in potentially explosive areas.

2.25 Start the engine at least 3m (10ft) from the fuelling area.

2.26 To reduce the risk of breathing toxic fumes, never start or run your unit in confined spaces.

2.27 Make sure you have a firm footing before starting.

2.28 Avoid using the machine in slippery conditions, on slopes or uneven ground.

2.29 Correct Personal Protective Equipment (PPE) **MUST** be worn at all times when operating or repairing this machine. This should include but is not limited to;

DESMI Ro-Clean A/S
Hestehaven 61
DK-5260 Odense S
Denmark

Tlf.: +45 65 48 16 10
Fax: +45 65 48 16 15
Internet: www.desmi.com

CVR-nr.: 69042910
VAT-nr.: 69042910

3. PART LOCATIONS

HY50. HY80. HY100

1	Fuel Tank	7	Pump Inlet
2	Throttle Lever	8	Pump Primer
3	Air Filter	9	Pump Outlet
4	Exhaust	10	Spark Plug
5	Recoil Starter	11	Engine Switch
6	Pump Drain Plug		

HYC50

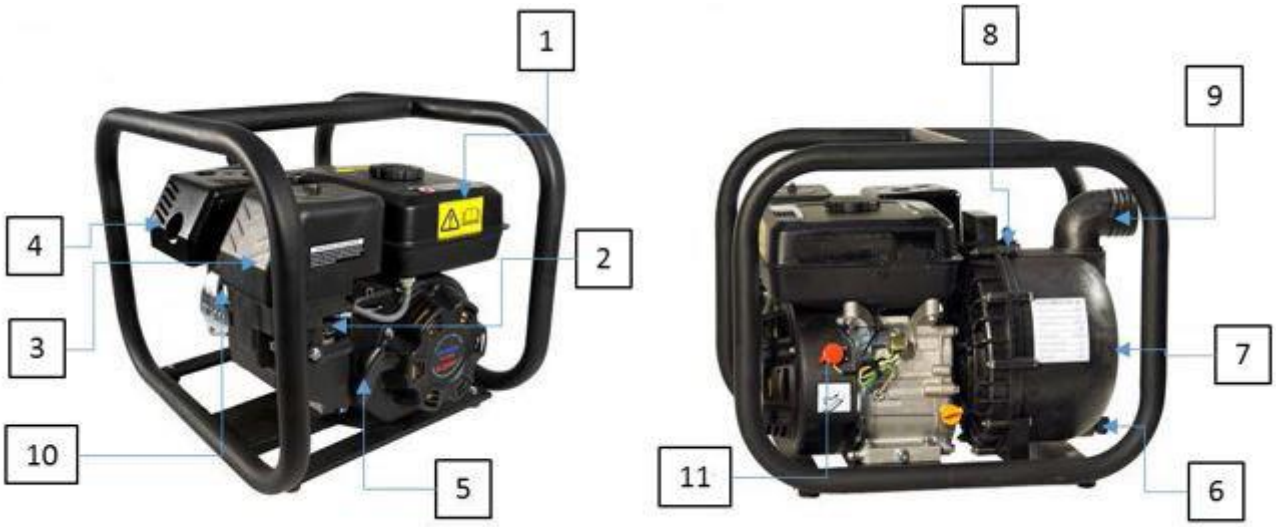

1	Fuel Tank	7	Pump Inlet
2	Throttle Lever	8	Pump Primer
3	Air Filter	9	Pump Outlet
4	Exhaust	10	Spark Plug
5	Recoil Starter	11	Engine Switch
6	Pump Drain Plug		

DESMI Ro-Clean A/S
Hestehaven 61
DK-5260 Odense S
Denmark

Tlf.: +45 65 48 16 10
Fax: +45 65 48 16 15
Internet: www.desmi.com

CVR-nr.: 69042910
VAT-nr.: 69042910

HYT80

1	Fuel Tank	7	Pump Inlet
2	Throttle Lever	8	Pump Primer
3	Air Filter	9	Pump Outlet
4	Exhaust	10	Spark Plug
5	Recoil Starter	11	Engine Switch
6	Pump Drain Plug		

4. PRE-OPERATION INSPECTION

WARNING

Failure to maintain this pump or deal with any problems that arise before operation could cause a malfunction in which you could be seriously injured.

4.0 For your safety and to maximise the service life of the pump, it is important to check the pump before use. If any problems are found, you MUST make sure that they are dealt with by the appropriate person before you operate the pump.

4.1 The exhaust gasses contain poisonous carbon monoxide and so it is important to avoid inhalation of these fumes.
Ensure that you are using the water pump outdoors, in a well-ventilated area and never use the water pump in a closed garage or other closed area.
To prevent fire hazards, keep the water pump away from all walls and do not place flammable objects close to the engine.
Before beginning your pre-inspection checks, ensure the pump is on a level surface and the ignition switch is in the OFF position.

4.2 Check around and underneath the water pump for signs of oil or fuel leaks.

4.3 Remove any dirt and debris, especially from the exhaust and recoil starter.

4.4 Look for any signs of damage.

4.5 Check all nuts, bolts, screws, hose connections and clamps are tight.

DESMI Ro-Clean A/S
Hestehaven 61
DK-5260 Odense S
Denmark

Tlf.: +45 65 48 16 10
Fax: +45 65 48 16 15
Internet: www.desmi.com

CVR-nr.: 69042910
VAT-nr.: 69042910

4.6 Check the internal condition of the hoses.

4.7 Before connecting the hoses to the water pump, make sure that they are in good condition.

4.8 Ensure that the suction hose is of reinforced construction to prevent the hose from collapsing.

4.9 Check that the sealing washer in the suction hose connector is in good condition. If there are any leaks or a poor connection, the pump will draw in air and will not function.

4.10 Check that the hose connectors and clamps are securely installed.

4.11 Check that the strainer is in good condition and is secured on the suction hose.

ENGINE OIL

NOTE

This machine is shipped without engine oil and will require filling before use. Failure to maintain the oil level will result in engine damage the will not be covered by the Warranty.

NOTE

Before checking the engine oil level, place the water pump on a flat level surface.

Oil Type: Semi-Synthetic SAE 15W40 Engine Oil	
Model Number	**Oil Capacity - L**
HY50	0.6
HY80	0.6
HY100	1.0
HYC50	0.6
HYT80	0.6

4.12 Remove the oil filler cap and wipe the dipstick clean with a lint free clean cloth.

4.13 Slowly fill with semi-synthetic SAE15w40 engine oil until it reaches the top of the oil filler neck.
Stop occasionally to check the level.

4.14 Refit the oil filler cap securely.

DESMI Ro-Clean A/S
Hestehaven 61
DK-5260 Odense S
Denmark

Tlf.: +45 65 48 16 10
Fax: +45 65 48 16 15
Internet: www.desmi.com

CVR-nr.: 69042910
VAT-nr.: 69042910

FUEL

DANGER

ALL FUELS ARE FLAMMABLE

ALWAYS fuel and defuel in a well-ventilated area away from any sources of ignition.

ALWAYS allow the engine to cool completely before refuelling.

NOTE

Before checking the fuel level, place the water pump on a flat level surface.

Fuel Type: Straight Unleaded Petrol	
Model Number	**Fuel Capacity - L**
HY50	3.6
HY80	3.6
HY100	6.0
HYC50	3.6
HYT80	3.6

4.15 Undo the fuel filler cap and slowly fill with fresh unleaded petrol to the upper limit mark on the fuel strainer.

4.16 **DO NOT** overfill, allow a 25mm gap between the top of the fuel and the top of the fuel tank to allow for expansion in hot weather.

4.17 Only use straight unleaded petrol.

4.18 Refit the fuel filler cap securely.

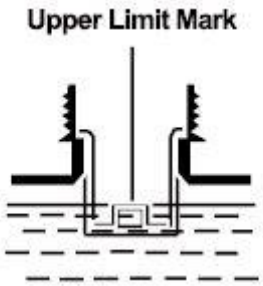

DESMI Ro-Clean A/S
Hestehaven 61
DK-5260 Odense S
Denmark

Tlf.: +45 65 48 16 10
Fax: +45 65 48 16 15
Internet: www.desmi.com

CVR-nr.: 69042910
VAT-nr.: 69042910

5. ASSEMBLY & OPERATION

5.0 To ensure safe usage of the water pump, you must make sure that you fully understand how to operate it properly and how to use the controls.

5.1 Before starting the water pump for the first time, please make sure you have read the Safety Instructions and Pre-Operation Inspection elements of this manual carefully.

5.2 Exhaust gasses contain poisonous carbon monoxide fumes that can build up to dangerous levels in enclosed areas.
Breathing in carbon monoxide fumes can cause unconsciousness or death.

5.3 For best pump performance, place the water pump near the water level and use hoses of the correct length and no longer than is necessary. This will allow the pump to produce the greatest output.

5.4 As the head increases, the pump output decreases. The length, type and size of both the suction and discharge hose can also significantly affect the pumps output.
By placing the pump near the water level, minimizes the suction head and reduces priming time.

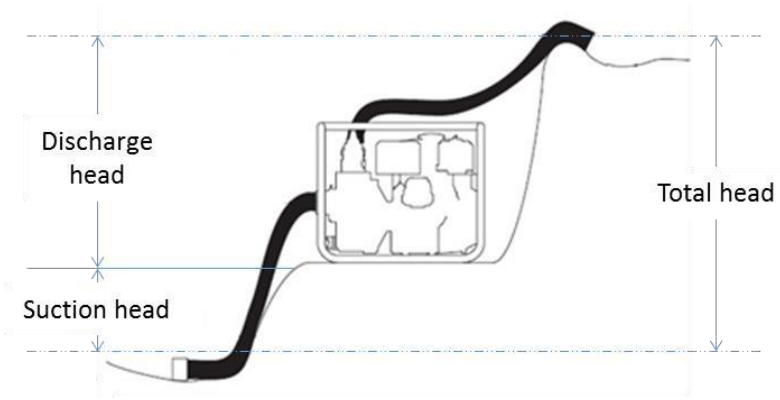

SUCTION HOSE CONNECTION (not supplied)

5.5 Place the sealing washer (2) over the supplied suction port (1).
Before using the connector sealing washer, make sure it is in good condition.

5.6 Offer the supplied hose connector (3) to the sealing washer (2) the put the supplied clamp ring (4) over the hose connector and tighten in a clockwise direction.

5.7 Take the supplied hose clamp ring (5) over the end of the suction hose (6) the push the suction hose over the end of the hose connector. Once in place, move the hose clamp into position and tighten the screw in a clockwise direction until the hose is secure.

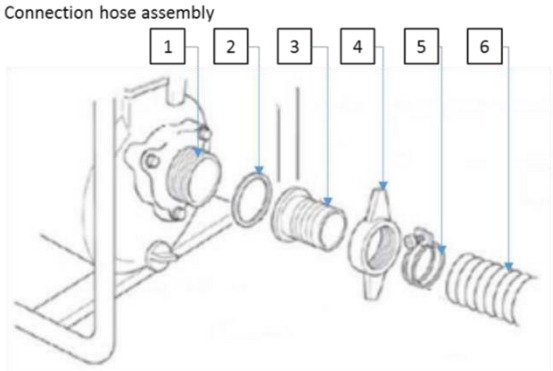

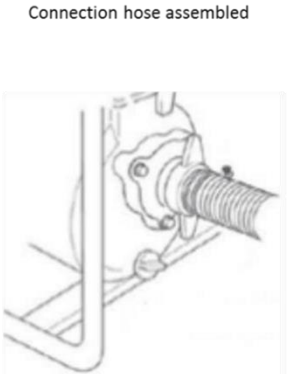

DESMI Ro-Clean A/S
Hestehaven 61
DK-5260 Odense S
Denmark

Tlf.: +45 65 48 16 10
Fax: +45 65 48 16 15
Internet: www.desmi.com

CVR-nr.: 69042910
VAT-nr.: 69042910

HOSE STRAINER CONNECTION

5.8 Install the supplied hose strainer on to the end of the suction hose (not supplied) and secure it with the hose clamp.
The strainer will help prevent the pump from becoming clogged or damaged with debris.

5.9 The hose strainer is fitted at the opposite end of the suction hose.

5.10 Take the hose clamp ring and place over the end of the suction hose, then push the suction hose over the end of the hose strainer.
Tighten the hose clamp ring screw in a clockwise direction until the hose is firmly secured to prevent air entering the pump and to prevent water leakage.

HOSE DIAMETERS

NOTE
Hoses are not supplied.

5.11 The hose diameter should be no wider than the water suction port diameter.
Minimum hose diameters should be as follows:

HY50 - 50mm
HY80 - 80mm
HY100 - 100mm
HYC50 - 50mm
HYT80 - 80mm

DISCHARGE HOSE CONNECTION (not supplied)

5.12 Connect the discharge hose (3) to the hose connector (1) and hose clamp (2) provided with the pump to install the discharge hose, then tighten the clamp.

5.13 Tighten the hose clamp ring screw in a clockwise direction until the hose is firmly secure to prevent the hose becoming detached.

5.14 For best results, use a short, large-diameter hose as it will reduce fluid friction and improve the pump output.

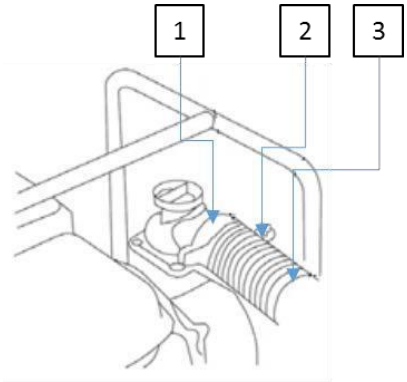

DESMI Ro-Clean A/S
Hestehaven 61
DK-5260 Odense S
Denmark

Tlf.: +45 65 48 16 10
Fax: +45 65 48 16 15
Internet: www.desmi.com

CVR-nr.: 69042910
VAT-nr.: 69042910

PRIMING THE PUMP

NOTE

Operating the pump in a dry, un-primed condition, will damage the seal.
If the pump has accidently been operated in a dry state, stop the engine immediately and allow it to cool before priming.

5.15 Before starting the engine, place the water pump on a flat, level surface and fill the pump with water.

5.16 Unscrew the priming plug (1) and fill the pump with clean water.

5.17 After priming, reinstall the priming plug and tighten.

5.18 DO NOT unscrew the priming plug during operation of the water pump.

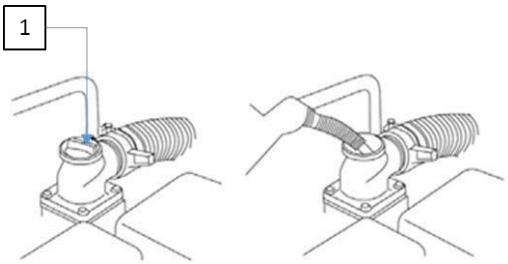

USING AT HIGH ALTITUDE

5.19 At high altitude, the standard carburettor air-fuel mixture will be excessively rich.

5.20 As a result output power will decrease and fuel consumption will increase.
The Air-Fuel mixture will be likely to make the spark plug dirty and difficult to start.

5.21 The engine performance can be improved by installing a main fuel jet of a smaller diameter in the carburettor. If you intend to use the water pump at altitudes greater than 1000m above sea level, contact us regarding carburettor modification.

5.22 Even with a suitable carburettor, the engine horsepower will decrease by around 3.5% for each 300m increase in altitude. The effect of this will be greater if a carburettor modification is not made.

DESMI Ro-Clean A/S
Hestehaven 61
DK-5260 Odense S
Denmark

Tlf.: +45 65 48 16 10
Fax: +45 65 48 16 15
Internet: www.desmi.com

CVR-nr.: 69042910
VAT-nr.: 69042910

6. STARTING PROCEDURE

6.0 Before starting/operating the water pump, please ensure you are familiar with each control function and know how to operate these functions in the event of an emergency.

6.1 Check the engine has been filled with fuel and oil.

6.2 Where fitted, move the fuel tap (1) to the ON position.

6.3 If the engine is cold, move the choke lever (2) to the CLOSED position.

6.4 Adjust the throttle lever (3) to change the speed of the engine, which will change the flow rate of the water. For a higher flow rate set the throttle lever to the 'HIGH' position and for a lower flow rate, set the throttle lever to the 'LOW' position.

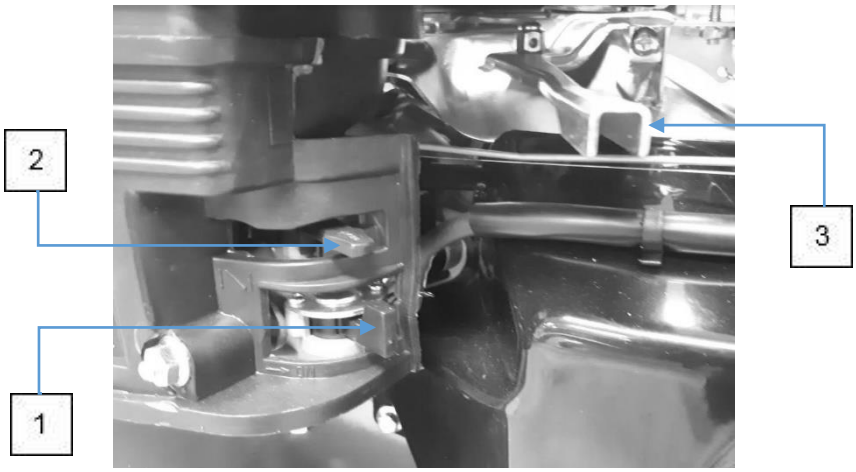

6.5 Turn the engine switch to the 'ON'

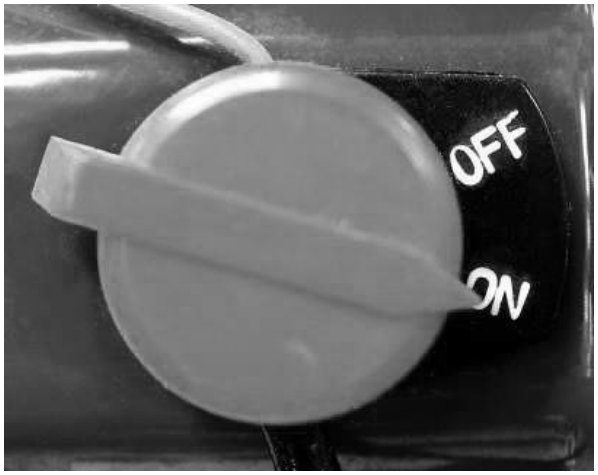

6.6 Gently pull the recoil starter handle until you feel resistance, then pull swiftly until the engine starts.
Ensure you keep the recoil cord in line with the direction of travel to prevent excessive cord wear.
DO NOT allow the cord to snap back, instead, gently return it to the start position.

DESMI Ro-Clean A/S
Hestehaven 61
DK-5260 Odense S
Denmark

Tlf.: +45 65 48 16 10
Fax: +45 65 48 16 15
Internet: www.desmi.com

CVR-nr.: 69042910
VAT-nr.: 69042910

7. STOPPING PROCEDURE

7.0 Allow the engine to sit at idle for 30 seconds under no load.

7.1 Move the engine switch to the 'OFF' position and the engine will come to a stop.

7.2 Where fitted, move the fuel tap to the 'OFF' position.

7.3 After use, remove the pump drain plug and drain the pump chamber.

7.4 Remove the pump priming cap and flush the chamber with clean, fresh water.

7.5 Allow the water to drain from the pump chamber, then replace the filler cap and drain plug.

8. MAINTENANCE

8.0 Good maintenance is essential for safe, economical and trouble-free operation. It will also help reduce air pollution. The maintenance schedule applies to normal operating conditions.
If you operate your pump under severe conditions such as sustained high load or high temperature then maintenance will need to be carried out more frequently.

Regular service period		**Every use**	**1st month or 20 hours**	**Every 3 months or 50 hours**	**Every 6 months or 100 hours**	**Every year or 300 hours**
Engine oil	**Check level**	O				
	Change		O		O	
Air filter	**Check**	O				
	Clean			O (1)		
Sediment cup	**Clean**				O	
Spark plug	**Clean**				O	Change
Valve clearance	**Readjust**				O	O (2)
Cylinder head	**Wash**	Every 300 hours (2)				
Fuel tank and strainer	**Wash**	Every 2 years (2)				
Fuel pipe	**Change**	Every 2 years (2)				
Impeller	**Check**					O (2)
Impeller clearance	**Check**					O (2)

(1) Service more regularly when the pump is used in dusty environments.

(2) These items should be serviced by a company authorised to do so by and approved Hyundai dealer.

DESMI Ro-Clean A/S
Hestehaven 61
DK-5260 Odense S
Denmark

Tlf.: +45 65 48 16 10
Fax: +45 65 48 16 15
Internet: www.desmi.com

CVR-nr.: 69042910
VAT-nr.: 69042910

WARNING

Improper maintenance and the fitting of aftermarket parts not specified by the manufacturer, may lead to malfunction that could cause serious injury or damage to the water pump that will not be covered by the warranty.

ENGINE OIL

NOTE

This machine is shipped without engine oil and will require filling before use. Failure to maintain the oil level will result in engine damage the will not be covered by the Warranty.

NOTE

Before checking the engine oil level, place the water pump on a flat level surface.

Oil Type: Semi-Synthetic SAE 15W40 Engine Oil	
Model Number	**Oil Capacity - L**
HY50	0.6
HY80	0.6
HY100	1.0
HYC50	0.6
HYT80	0.6

8.1 Drain the engine oil while the engine is warm not hot. Warm oil will drain more effectively.

8.2 Place a suitable container (4) below the engine to catch the used oil, then remove the oil filler cap/dipstick (1) and the drain plug (3) and washer (4).

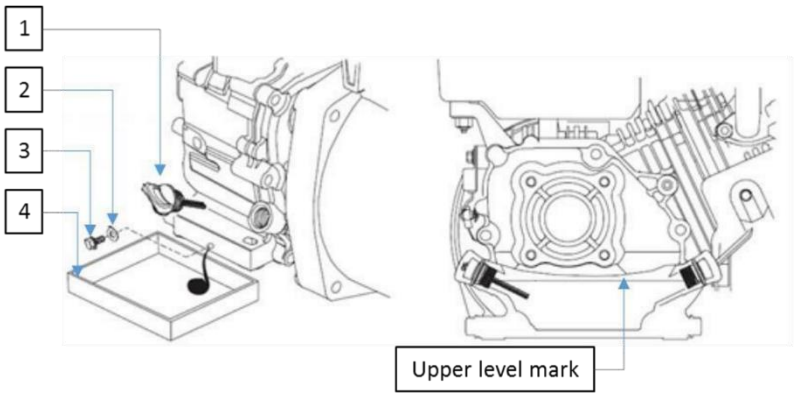

8.3 Allow the oil to drain completely and then replace the drain plug and washer and tighten securely.

8.4 DO NOT pour waste oil down any drains or grids and dispose of in the proper manner.

DESMI Ro-Clean A/S
Hestehaven 61
DK-5260 Odense S
Denmark

Tlf.: +45 65 48 16 10
Fax: +45 65 48 16 15
Internet: www.desmi.com

CVR-nr.: 69042910
VAT-nr.: 69042910

8.5 Place the water pump on flat, level ground and slowly refill with oil to the top of the oil filler neck.
Stop occasionally to check the level.

8.6 Refit the oil filler cap/dipstick securely.

AIR FILTER

NOTE

Never run the engine without an air filter or with a heavily used or damaged filter. This will restrict air flow to the engine and cause poor starting, poor running or possible damage to the engine.

8.7 Undo the air filter cover nut and remove the air filter cover.

8.8 Undo the air filter nut and remove the air filter.

8.9 Inspect the air filter and if it shows signs of wear or damage, replace immediately.

8.10 Foam Elements: wash the foam element in warm soapy water, rinse with fresh water and allow to dry.
Once dry soak in fresh engine oil and squeeze out any excess.
Refit.

8.11 Paper Elements: Blow the dust from the paper element from the inside of the air filter, out.
Do not use a brush as this will push the debris further into the filter.
Refit.

8.12 Carefully clean the air filter housing and seals ensuring no dirt or debris enters the carburettor chamber.

8.13 Reassemble and refit the air filter.

All models

1. Air filter cover wing nut.

2. Air filter cartridge.

3. Air filter foam element

DESMI Ro-Clean A/S
Hestehaven 61
DK-5260 Odense S
Denmark

Tlf.: +45 65 48 16 10
Fax: +45 65 48 16 15
Internet: www.desmi.com

CVR-nr.: 69042910
VAT-nr.: 69042910

SPARK PLUG

NOTE

Using the wrong type of spark plug can result in engine damage.

Recommended Spark Plug: NGK BP6ES or Equivalent.

8.14 Remove the spark plug HT lead cap (3) and remove any dirt from around the spark plug base.

8.15 Using a plug wrench (1) undo and remove the spark plug.

8.16 Using a feeler gauge, measure the spark plug gap (5).
If the insulator or electrode is damaged or worn, then replace the spark plug.
Correct the spark plug gap by gently bending the electrode until it is at the correct setting of 0.7 to 0.8mm.

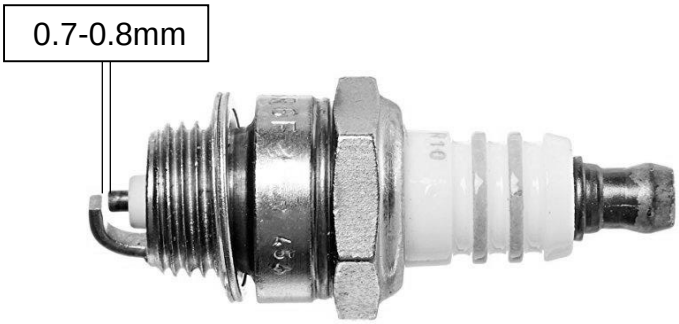

8.17 Inspect the spark plug sealing washer (4) is in good condition.

8.18 Refit the spark plug by hand to avoid cross threading.

8.19 Once the spark plug washer has touched the top of the cylinder head, tighten with the plug wrench.
DO NOT over tighten.

8.20 Refit the spark plug HT lead cap.

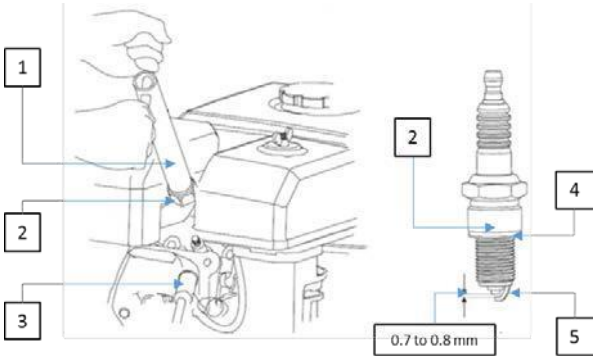

DESMI Ro-Clean A/S
Hestehaven 61
DK-5260 Odense S
Denmark

Tlf.: +45 65 48 16 10
Fax: +45 65 48 16 15
Internet: www.desmi.com

CVR-nr.: 69042910
VAT-nr.: 69042910

9. STORAGE

NOTE

If you store the machine for periods of 30 days or more you must follow the correct storage procedure.
Failure to do so may result in poor starting, poor running or damage to the machine.

9.0 Clean the water pump with a damp cloth.
DO NOT use a hose pipe or pressure washer.

9.1 Change the engine oil as specified in the Maintenance section.

9.2 Remove the spark plug and pour one teaspoon of fresh engine oil down the cylinder bore.
Place a lint free cloth over the spark plug hole and gently pull the recoil start handle 4 to 5 times to coat the cylinder bore with oil.
Refit the spark plug.

9.3 Place a suitable container underneath the carburettor.

9.4 Remove the fuel from the fuel tank by using a syphon.

9.5 Remove the drain plug (3) and the washer (2) from the carburettor float bowl (1) and sediment cup (6) and O ring, then open up the fuel lever (4).

9.6 Completely drain the fuel from the carburettor and fuel tank, then replace the sediment cup and drain plug and re-tighten.

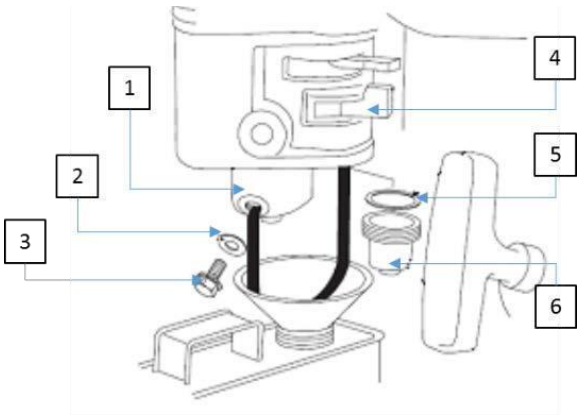

9.7 Lubricate all cables or moving parts with a light silicone grease.

9.8 Store in a cool, dry place away from sources of ignition.

9.9 Do not stack other items on top of the water pump.

DESMI Ro-Clean A/S
Hestehaven 61
DK-5260 Odense S
Denmark

Tlf.: +45 65 48 16 10
Fax: +45 65 48 16 15
Internet: www.desmi.com

CVR-nr.: 69042910
VAT-nr.: 69042910

10. TROUBLESHOOTING

Engine

Engine will not start	Cause	Corrective measure
Check controls	Fuel Valve 'OFF'	Move fuel valve lever to 'ON' position
	Choke 'OPEN'	Move the choke lever to the 'CLOSED' position unless the engine is warm
	Engine Switch 'OFF'	Turn engine switch to 'ON'
Check Fuel	Out of Fuel	Refuel
	Bad fuel, pump has been stored without treating or draining fuel or refueling with bad fuel	Drain the fuel tank and carburetor and, refuel with fresh fuel
Remove and inspect the spark plug	Faulty spark plug or improperly gapped	Adjust gap or replace with a new spark plug
	Spark plug wet with fuel, flooded engine	Dry spark plug and reinstall. Start engine with throttle lever in 'FAST'
Contact dealer	Fuel filter clogged, carburetor malfunction, ignition malfunction, valves stuck etc.	Return to dealer for repair

Water Pump

No output from pump	Cause	Corrective measure
Check pump chamber	Pump not primed	Prime pump
Check suction hose	Hose collapsed, cut or punctured	Replace hose
	Strainer not completely under water	Sink strainer and end of suction hose completely under water
	Air leak at connector	Replace sealing washer if it is missing or damaged. Tighten hose connector and clamp
	Strainer clogged	Clear debris from strainer
Measure suction and discharge head	Excessive head	Relocate pump and hose to reduce head
Check engine	Engine lack power	See engine troubleshooting above
Low pump outlet	**Cause**	**Corrective action**
Check suction hose	Hose collapsed, cut or punctured	Replace hose
	Strainer not completely under water	Sink strainer and end of suction hose completely under water
	Air leak at connector	Replace sealing washer if it is missing or damaged. Tighten hose connector and clamp
	Strainer clogged	Clear debris from strainer
Check discharge hose	Hose damaged, too long or diameter too small	Replace discharge hose
Measure suction and discharge head	Excessive head	Relocate pump and hose to reduce head
Check engine	Engine lack power	See engine troubleshooting above

WIRING DIAGRAM

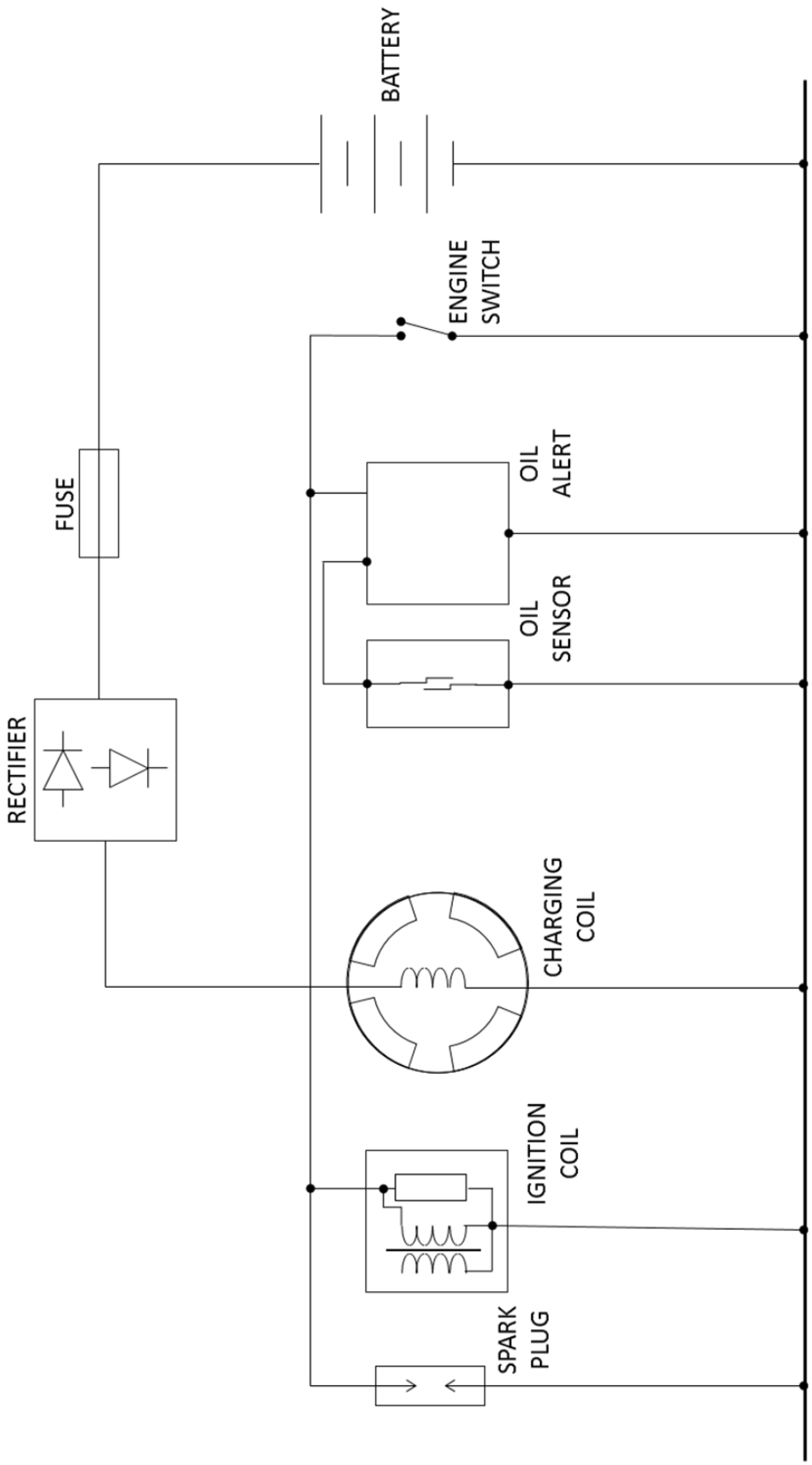

DESMI Ro-Clean A/S
Hestehaven 61
DK-5260 Odense S
Denmark

Tlf.: +45 65 48 16 10
Fax: +45 65 48 16 15
Internet: www.desmi.com

CVR-nr.: 69042910
VAT-nr.: 69042910

11. SPECIFICATION

	HY50	HY80	HY100	HYC50	HYT80
Inlet/Outlet Diameter - mm	50	80	100	50	80
Engine Displacement - cc	212	212	270	212	212
Max Head - m	32	28	30	30	25
Max Suction Head - m	7	7	7	8	7
Max Capacity – m^3/h	28	58	90	25	60
Engine Speed – rpm	3600	3600	3600	3600	3600
Oil Type	Semi-Synthetic SAE15W40 Engine Oil				
Oil Capacity – l	0.6	0.6	1.0	0.6	0.6
Fuel Type	Straight Unleaded Petrol				
Fuel Capacity – l	3.6	3.6	6.0	3.6	3.6
Net Weight – kg	23	25	41	29	35
Product Dimensions – mm (LxWxH)	495x395x425	535x395x425	645x485x600	550x445x450	565x445x460

DESMI Ro-Clean A/S
Hestehaven 61
DK-5260 Odense S
Denmark

Tlf.: +45 65 48 16 10
Fax: +45 65 48 16 15
Internet: www.desmi.com

CVR-nr.: 69042910
VAT-nr.: 69042910

12. DECLARATION OF CONFORMITY

12.0 Genpower Ltd confirms that the Hyundai water pumps conform to the following CE Directives;

2006/42/EC Machinery Directive
2004/108/EC EMC Directive
73/23/EC The Low Voltage Directive
97/68/EC NRMM Emissions Directive
2000/14/EC Noise Emissions Directive

EC DECLARATION OF CONFORMITY

The undersigned, as authorised by: Genpower Ltd

Declares that the following equipment manufactured under license by Hyundai Korea

Conforms to the Directive: 2006/42/EC Machinery Directive, 2004/108/EC EMC Directive , 73/23/EC The Low Voltage Directive, 97/68/EC NRMM Emissions Directive, 2000/14/EC Noise Emissions Directive.

Of the European Parliament and of the council on the approximation of the laws of the Member States relating to the noise emission in the environment by equipment for use outdoors.

Equipment Category: Water Pumps

Product Name/Model: HY50, HY80, HY100, HYT80, HYC50

Type: Water Pump

The technical documentation is kept by: Roland Llewellin, Genpower Ltd, Isaac Way, Pembroke Dock, Pembrokeshire, SA72 4RW.

The conformity assessment procedure followed was in accordance with annex V or VI of the Directive.

Notified Body: Chongqing Maifeng Power Machinery Co.Ltd 55 Yinxiang Grand Ave, Yinxiang New Town, Tuchang, Hechuan District, P.R. China

Certification No: 70403075161603

Measured Sound Power Level: 104dB (A)

Guaranteed Sound Power Level: 104dB (A)

A copy of this certificate has been submitted to the European Commission and to EU Member State United Kingdom.

Place of Declaration: Pembroke Dock, SA72 4RW

Date: Tuesday, 06 August 2019
Signed By: Roland Llewellin

Position in Company: Managing Director

Name and address of manufacturer or authorised representative:

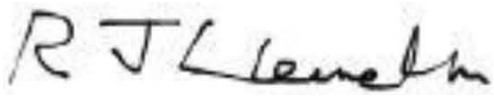

Genpower Ltd, Isaac Way, Pembroke Dock, Pembrokeshire, SA72 4RW.

13. RECYCLING & PRODUCT DISPOSAL

14.0 We do not offer a take back scheme for the recovery of Waste Electrical Electronic Equipment (WEEE) & Batteries.
Instead the responsibility to dispose of WEEE and or Batteries is passed onto you by us.
So when it becomes necessary to dispose of your machine you must take it to your local Civic Amenity Site.
For further information please contact your local Authority for disposal advice.

14.1 You **MUST** make sure that all unused oil and fuel is disposed of correctly either beforehand or at your local Civic Amenity Site.
Under NO circumstances must any fuel or oil be put down any drains.

14.2 Certain products contain WEEE waste which should not be disposed of in your domestic waste.

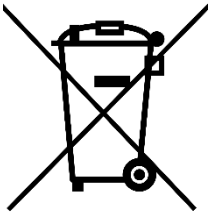

14.3 You **MUST** recycle WEEE in accordance with your local authority or recycling centre.

14.4 Certain products contain batteries which should not be disposed of in your domestic waste.

14.5 You **MUST** recycle batteries in accordance with your local authority or recycling centre.

14.6 Unwanted packaging and materials should be stored and taken to a recycling centre so it can be disposed of in a manner which is compatible with the environment.

14.7 The following symbol means that you should ‘Reduce – Reuse – Recycle’.

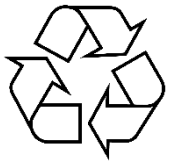

14.8 We are a Member of the VALPAK National Compliance Scheme and our registration number is **RM08660**

14.9 For further information about disposal please contact your Local Authority.

14.10 You can also get more advice and guidance about recycling at the following website http://www.recycle-more.co.uk

14.11 Should you pass this product on to another user either sold or loaned, you **MUST** pass on this user manual.
This will make sure that all other users can use and maintain this machine safely.

DESMI Ro-Clean A/S
Hestehaven 61
DK-5260 Odense S
Denmark

Tlf.: +45 65 48 16 10
Fax: +45 65 48 16 15
Internet: www.desmi.com

CVR-nr.: 69042910
VAT-nr.: 69042910

14. CONTACT DETAILS

15.0	POSTAL ADDRESS	DESMI Ro-Clean A/S, Hestehavej 61. 5260 Odense S. Denmark
15.1	TELEPHONE	+45 65481610
15.3	TECHNICAL EMAIL	desmiro-clean@desmi.com
15.4	WEBSITE	www.Desmiro-clean.com

15. WARRANTY

16.0 Proof of purchase will be required before you make a warranty claim.

Full warranty terms and conditions can be found on the HYUNDAI POWER PRODUCTS website: www.hyundaipowerproducts.co.uk

16. MANUAL UPDATES

17.0 Our manuals are constantly being reviewed and updated.
However if you find an error, omission or something you find unclear, please contact your dealer for assistance.

17.1 Our latest manuals are also placed online.

17.2 We reserve the right to make any modifications without prior notice whenever necessary.

HYUNDAI
POWER PRODUCTS

GENUINE PRODUCT OF
HYUNDAI CORPORATION

MARINE & OFFSHORE | INDUSTRY | OIL SPILL RESPONSE | DEFENCE & FUEL | UTILITY

DESMI Ro-Clean A/S
Hestehaven 61
DK-5260 Odense S
Denmark

Tlf.: +45 65 48 16 10
Fax: +45 65 48 16 15
Internet: www.desmi.com

CVR-nr.: 69042910
VAT-nr.: 69042910